Solutions – PHYC10004 Semester 2, 2015

1 Question 1

a. (i) An EMF will be induced (Faraday's law) so as to produce a magnetic field that *opposes* the one produced by the current in P (Lenz's law). Hence, **anti-clockwise**.

(ii) **Yes**. There are two loops with antiparallel currents, so Q feels a force to the **right** (i.e., away from P).

b. (i)

$$\Phi_B = \int \mathbf{B}.\mathrm{d}\mathbf{A} \tag{1}$$
$$= |B| \times \text{area subtended} \tag{2}$$
$$= |B| ab \cos\theta \tag{3}$$

Time dependence: $\theta(t) = 2\pi f t$.

$$= |B| ab \cos(2\pi f t) \tag{4}$$

(ii) To show: $E(t) = 2\pi f N a b B \sin(2\pi f t)$.
Total flux for N coils is:

$$\Phi_{B,N}(t) = NBab\cos(2\pi f t) \tag{5}$$

Faraday's law:

$$E = -\frac{\mathrm{d}\Phi_{B,N}(t)}{\mathrm{d}t} \tag{6}$$
$$= NBab\frac{\mathrm{d}}{\mathrm{d}t}\cos(2\pi f t) \tag{7}$$
$$= -2\pi f NBab\sin(2\pi f t). \tag{8}$$

(iii)

$$P = V^2/R \tag{9}$$

$$= \frac{4\pi^2(fNBab)^2\sin^2(2\pi ft)}{R}. \tag{10}$$

2 Question 2

a. (i) Ampère's law: $\oint \mathbf{B}.\mathrm{d}\mathbf{l} = \mu_0 i_{\text{enc}} + \mu_0 i_D$. Assuming free space, we can neglect the displacement current term.

Consider a rectangular Ampèrian loop with one side parallel and inside the solenoid long enough to cover N turns and with its parallel side at infinity. We also assume the internal field is parallel to the loop and hence only the internal segment contributes to the integral:

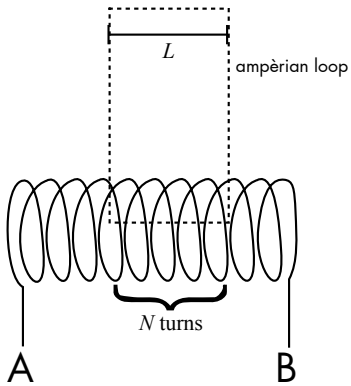

$$\oint \mathbf{B}.\mathrm{d}l = BL \tag{11}$$

$$i_{\text{enc}} = N \times i \tag{12}$$

Ampère's law:

$$\rightsquigarrow BL = \mu_0 N i \tag{13}$$

$$\rightsquigarrow B = \mu_0 \tfrac{N}{L} i \tag{14}$$

Define $n = \frac{\text{turns}}{\text{metre}} = \frac{N}{L}$:

$$\rightsquigarrow B = \mu_0 n i. \tag{15}$$

(ii) $B \to A$

(iii)

$$B = \mu_0 n i \tag{16}$$

$$= 4\pi 10^{-7}\,\mathrm{TmA^{-1}} \frac{1000 \text{ turns}}{20 \text{ m}} 2\,\mathrm{A} \tag{17}$$

$$= 1.25 \times 10^{-4}\,\mathrm{T}. \tag{18}$$

Note: in the original exam paper, it is expressed that the ***wire*** *is* 20 m *long; this solution assumes the solenoid is that long.*

b. Given:

$$\mathrm{d}B = \frac{\mu_0}{4\pi}\frac{i\mathrm{d}s\sin\theta}{r^2} \tag{19}$$

Show that $B = \frac{\mu_0 i}{2\pi R}$.

Take the Biot-Savart law and integrate both sides:

$$\int \mathrm{d}B = \frac{i\mu_0}{4\pi}\int \frac{\mathrm{d}s\sin\theta}{r^2} \tag{20}$$

Note that $\sin\theta = \frac{\text{opposite}}{\text{hypotenuse}} = \frac{\mathrm{R}}{r}$.

$$= \frac{i\mu_0}{4\pi}\int \frac{\mathrm{d}s\, s}{r^3} \tag{21}$$

Note $r = \sqrt{s^2 + R^2}$.

$$= \frac{i\mu_0}{4\pi}\int \frac{\mathrm{d}s\, s}{(s^2+R^2)^{3/2}} \tag{22}$$

Put terminals on the integral. To be well-defined, take s from 0 to ∞ (which, by symmetry, gives half of the magnetic field magnitude B).

$$\frac{B}{2} = \frac{i\mu_0}{4\pi}\left[\frac{-1}{\sqrt{R^2+s^2}}\bigg|_{s\to\infty} - \frac{-1}{\sqrt{R^2+s^2}}\bigg|_{s=0}\right] \tag{23}$$

$$= \frac{\mu_0 i}{4\pi}\left[0 - \frac{-1}{\sqrt{R^2}}\right] \tag{24}$$

$$= \frac{\mu i}{4\pi R}. \tag{25}$$

Double this to get $\frac{\mu_0 i}{2\pi R}$ as required.

3 Question 3

a. As the resistors are all of equal resistance, Kirchoff's law tells us: the current flowing in at A must equal the current flowing out at G, and that at each juncture, the current flows equally down each branch.

   Each of $\{B, D, E\}$ has the same current flowing through it and has the same number of resistors between it and A, and so must be at the same potential (from $V = IR$). The same argument applies for $\{C, F, H\}$.

   Thus, the equipotential partitions are: $\{A\}; \{B, D, E\}; \{C, F, H\}; \{G\}$.

b. Connecting the vertices in those partitions results in:

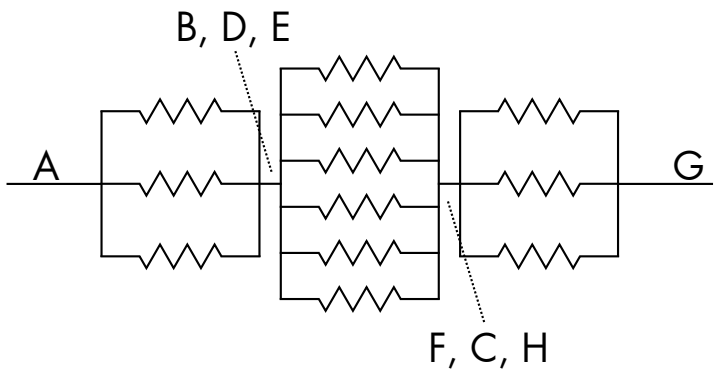

   Each parallel block can be replaced with a single resistor.

c. Let the parallel blocks be resistances R_I, R_{II}, R_{III}.

$$R_I = (\tfrac{1}{R} + \tfrac{1}{R} + \tfrac{1}{R})^{-1} = \tfrac{R}{3} \tag{26}$$
$$R_{II} = (\tfrac{1}{R} \times 6)^{-1} = \tfrac{R}{6} \tag{27}$$
$$R_{III} = R_I = \tfrac{R}{3} \tag{28}$$
$$R_{\text{total}} = R_I + R_{II} + R_{III} \tag{29}$$
$$= \tfrac{R}{3} + \tfrac{R}{6} + \tfrac{R}{3} = \tfrac{5R}{6}. \tag{30}$$

4 Question 4

a. (i) $r = R/2$.

By symmetry, all electric field vectors will point **radially outwards**. Draw a spherical Gaussian surface at $r = R/2$.

$$\int \mathbf{E}.\mathrm{d}A = \frac{q_{\text{enc}}}{\epsilon_0} \tag{31}$$

$$\rightsquigarrow E \times (\text{surface area of sphere}) = \frac{Q_{\text{enc}}}{\epsilon_0} \tag{32}$$

$$\rightsquigarrow E = \frac{Q}{4\pi r^2 \epsilon_0} \tag{33}$$

Substitute $r = R/2$:

$$\rightsquigarrow E = \frac{Q}{\pi R^2 \epsilon_0}. \tag{34}$$

(ii) $r = R$.

Same analysis as above, but substitute $r = R$:

$$E = \frac{Q}{4\pi R^2 \epsilon_0} \tag{35}$$

and the field continues to point **radially outwards**.

(iii) $r > R$ Because the material is conducting, a screening charge forms on the inner surface of the cavity. Thus, any Gaussian surface will have $q_{\text{enc}} = Q + \text{screening charge} = Q + (-Q) = 0$. Thus $\int \mathbf{E}.\mathrm{d}A = 0$. Since we have spherical symmetry, $E = 0$.

b. (i) Consider a cylindrical Gaussian surface of length L and radius r.

For $r < a$, $q_{\text{enc}} = 0$.

For $r > b$, $q_{\text{enc}} = q_a + q_b = L\lambda + (-L\lambda) =$.

Thus:

$$\int \mathbf{E}.\mathrm{d}\mathbf{A} = 0 \tag{36}$$

Symmetry dictates the ends of the cylinder do not contribute.

$$\rightsquigarrow E \times L \times 2\pi r = 0, \qquad L \neq 0, r \neq 0 \tag{37}$$

$$\rightsquigarrow E = 0. \tag{38}$$

(ii) Same shaped Gaussian surface.

$$\int \mathbf{E}.\mathrm{d}A = \frac{q_{\text{enc}}}{\epsilon_0} = \frac{\lambda L}{\epsilon_0} \tag{39}$$

$$\rightsquigarrow |E| L 2\pi r = \frac{\lambda L}{\epsilon_0} \tag{40}$$

$$\rightsquigarrow |E| = \frac{\lambda}{2\pi r \epsilon_0}. \tag{41}$$

(iii) Consider a cylindrical Gaussian surface, $a < r < b$. As $L \to 0$, $q_{\text{enc}} \to 0$ and so the electric field must have only radial components.

5 Question 5

a. (i) Maxwell-Ampère:

$$\oint \mathbf{B}.\mathrm{d}\mathbf{l} = \mu_0 i + \mu_0 i_D. \tag{42}$$

$i_D = \epsilon_0 \dfrac{\mathrm{d}\Phi_E}{\mathrm{d}t}$ is the displacement current.

(ii) There will be a non-zero displacement current in the presence of a time-varying electric field (which in turn induces a magnetic field – hence the need for the displacement current term in the M-A law).

(iii) No.

b. (i) At $r = R/2$: draw an Ampèrian loop (and assuming no other currents):

$$\oint \mathbf{B}.\mathrm{d}\mathbf{l} = 0 + \mu_0 i_d = \mu_0 i_0 (\tfrac{r}{R}) \tag{43}$$

$$\rightsquigarrow |B| \times 2\pi \tfrac{R}{2} = \mu_0 i_0 (\tfrac{R}{2R}) \tag{44}$$

$$\rightsquigarrow |B| = \frac{\mu_0 i_0}{2\pi R}. \tag{45}$$

(ii) At $r = 2R$:

$$\oint \mathbf{B}.\mathrm{d}\mathbf{l} = 0 + \mu_0 i_0 = \mu_0 i_0 \tfrac{R}{R} \tag{46}$$

$$\rightsquigarrow |B| \times 2\pi 2R = \mu_0 i_0 \tag{47}$$

$$\rightarrow |B| = \frac{\mu_0 i_0}{4\pi R}. \tag{48}$$

(iii) Right hand rule: the magnetic field is **concentric circles** and **circulates anti-clockwise** (looking in to the page).

6 Question 6

a. After one second, a cylinder of water has left the nozzle. This cylinder has a length of $v_2 * 1\,\mathrm{s}$ and an end area of $\pi r^2 = \frac{1}{4}\pi D_2^2$.

The volume is: $V = L \times A = v_2 A_2 (1\,\mathrm{s})$.

The mass is: $\rho = \frac{M}{V} \rightsquigarrow M = \rho V$:

$$M = \rho v_2 A_2 (1\,\mathrm{s}), \tag{49}$$

$$\text{where } A_2 = \tfrac{1}{4}\pi D_2^2. \tag{50}$$

b. To show: $v_2 = 9.95\,\mathrm{ms}^{-1}$.

Conservation of momentum over one second tells us the impulse must equal the momentum of the water column:

$$F\Delta t = Mv \tag{51}$$

$$(70\,\mathrm{kgms}^{-2})(1\,\mathrm{s}) = 1000\,\mathrm{kgm}^{-3} v_2 (\tfrac{1}{4})\pi (0.03\,\mathrm{m})^2 (1\,\mathrm{s}) v_2 \tag{52}$$

$$\rightsquigarrow v_2^2 = \frac{70 \times 4}{1000 \times \pi \times (0.03)^2}\,\mathrm{m}^2\mathrm{s}^{-2} \tag{53}$$

$$\rightsquigarrow v_2 = 9.95\,\mathrm{ms}^{-1}. \tag{54}$$

c. Continuity equation: $A_1 v_1 = A_2 v_2$. Thus:

$$(\pi \tfrac{1}{4} D_1^2) v_1 = (\pi \tfrac{1}{4} D_2^2) v_2 \tag{55}$$

$$\rightsquigarrow v_1 = (\tfrac{D_2}{D_1})^2 v_2 \tag{56}$$

$$= 9.95(3/10)^2 \tag{57}$$

$$= 0.896\,\mathrm{ms}^{-1}. \tag{58}$$

d. Bernoulli: $p + \rho g h + \frac{1}{2}\rho v^2 =$ constant. Equate the points at D_1 and D_2.

$$p_1 + \rho g h + \tfrac{1}{2}\rho v_1^2 = p_2 + \tfrac{1}{2}\rho v_2^2 \tag{59}$$

$$\rightsquigarrow (p_1 - p_2) = \tfrac{1}{2}\rho (v_2^2 - v_1^2) \tag{60}$$

$$\rightsquigarrow \Delta p = \tfrac{1}{2}((9.95)^2 - (0.895)^2) \tag{61}$$

$$\rightsquigarrow \Delta p = 4.91 \times 10^4\,\mathrm{Pa}. \tag{62}$$

e.

$$\Delta P = \rho_{\mathrm{Hg}} g h \tag{63}$$

$$h = \frac{\Delta P}{\rho_{\mathrm{Hg}} g h} = \frac{4.91 \times 10^4}{1.36 \times 10^4 \times 9.8} = 0.37\,\mathrm{m}. \tag{64}$$

7 Question 7

a. (i) Yes – system 1.

(ii) Yes – system 2.(iii)

Yes – system 3.

b. (i) Gas.

(ii) Solid.

c. Work done by the piston:

$$W = |F|x = (200\,\mathrm{N})(0.06\,\mathrm{m}) = 12\,\mathrm{J}. \tag{65}$$

Change in internal energy:

$$\Delta U = mc_V \Delta T = (0.03\,\mathrm{kg})(718\,\mathrm{J\,kg^{-1}\,K^{-1}})(6\,\mathrm{K}) \tag{66}$$

$$= 129\,\mathrm{J}. \tag{67}$$

Thus, heat transfer $Q = \Delta U + W = 117$ J.

d. (i) $\Delta U = Q - W$; in a constant volume process no work is done, so $W = 0$ and $\Delta U = Q = 209\,\mathrm{J}$.

(ii) As above, no work is done in a constant volume process, so $W = 0$.

8 Question 8

a.

$$hf = K_{\max} + \phi \tag{68}$$
$$\rightsquigarrow \tfrac{hc}{\lambda} = K_{\max} + \phi \tag{69}$$
$$\rightsquigarrow K_{\max} = \tfrac{hc}{\lambda} - \phi \tag{70}$$
$$= 6.21 - 4.7 = 1.5\,\text{eV} \tag{71}$$

b. (i)

$$\Delta\lambda = \frac{h}{m_e c}(1 - \cos\theta) \tag{72}$$
$$= \frac{6.63 \times 10^{-34}\,\text{Js}}{(9.11 \times 10^{-31}\text{kg})(3 \times 10^{8}\text{ms}^{-1})} \times (1 - \cos(37\,\text{deg})) \tag{73}$$
$$= 4.88 \times 10^{-13}\,m \tag{74}$$

(ii) Wavelength was: $\lambda = \frac{hc}{E} = 4.14 \times 10^{-12}\,\text{m}$
Wavelength is now: $\lambda' = 4.14 \times 10^{-12} + 4.88 \times 10^{-13} = 4.63 \times 10^{-12}\,\text{m}$.
$E = hc/\lambda = 268\,\text{keV}$.

(iii) By conservation of energy, must be $\Delta E = 300 - 268 = 32\,\text{keV}$.

(iv) Wavelength of 300 keV photon:

$$E = hc/\lambda \tag{75}$$
$$\rightsquigarrow \lambda = hc/E = 4.13 \times 10^{-12}\,\text{m}. \tag{76}$$

Wavelength of an electron:

$$\lambda = \frac{h}{p} \quad = h/\text{sqrt}(2m\Delta E) \tag{77}$$
$$= 6.48 \times 10^{-12}\,\text{m}. \tag{78}$$

Thus the ratio is $\frac{\text{photon}}{\text{electron}} = 0.74$.

c. (i) De Broglie: $\lambda = h/p = h/mv$. Want $\lambda = \frac{\text{doorway}}{10} = 0.075\,\text{m}$.

$$0.075 = \tfrac{h}{mv} \rightsquigarrow v = 1.10 \times 10^{-34}\,\text{ms}^{-uuuppp1} \tag{79}$$

(ii)

$$t = \frac{d}{s} \tag{80}$$

$$= 0.15/(1.10 \times 10^{-34}) \tag{81}$$

$$= 1.36 \times 10^{33}\,\mathrm{s}. \tag{82}$$

(iii) This time is considerably longer than the age of the universe, so this student has nothing to worry about.

9 Question 9

a. (i)

$$M = V\rho \tag{83}$$
$$= (\tfrac{4}{3}\pi r^3)(7874) \tag{84}$$
$$= 0.264\,\text{kg}. \tag{85}$$

(ii)

$$P = \sigma\epsilon A T^4 \tag{86}$$

Ideal blackbody tells us $\epsilon = 1$; sphere tells us $A = 4\pi r^2$.

$$= (5.67 \times 10^{-8})(1)(4\pi(0.02)^2)(293.15)^4 \tag{87}$$
$$= 2.10\,\text{W} \tag{88}$$

(iii)

$$\lambda_{\text{max}} T = 2898\,\mu\text{mK} \tag{89}$$
$$\rightsquigarrow \lambda_{\text{max}} = 9.88\,\mu\text{m}. \tag{90}$$

b. (i) $E = \frac{hc}{\lambda} = 2.01 \times 10^{-20}\,\text{J}$

(ii) Energy in $1\,\text{s} = P \times 1\,\text{s} = 2.01\,\text{J}$.

$$\frac{2.01\,\text{J}}{2.01 \times 10^{-20}\,J\,(\text{photon}^{-1})} \implies 10^{20} \text{ photons per second.} \tag{91}$$

10 Question 10

a. $E_n = \frac{h^2}{8mL^2}n^2$

$$\frac{h^2}{8mL^2} = \frac{(6.63 \times 10^{-34})^2}{8 \times 9.11 \times 10^{-31} \times (0.2 \times 10^{-9})^2} \tag{92}$$
$$= 1.51 \times 10^{-18}\,\text{J}. \tag{93}$$

Thus:

$$E_1 = (1.51 \times 10^{-18}) \times 1^2 = 1.51 \times 10^{-18}\,\text{J} \tag{94}$$
$$E_2 = (1.51 \times 10^{-18}) \times 2^2 = 6.03 \times 10^{-18}\,\text{J} \tag{95}$$
$$E_3 = (1.51 \times 10^{-18}) \times 3^2 = 1.36 \times 10^{-17}\,\text{J}. \tag{96}$$

b.

$$E_1 = -\tfrac{13.6}{1^2} = -13.6\,\text{eV} \tag{97}$$
$$E_2 = -\tfrac{13.6}{2^2} = -3.4\,\text{eV} \tag{98}$$
$$\implies \Delta E = 10.2\,\text{eV} \tag{99}$$

Thus:

$$f = \frac{E}{h} = 2.46 \times 10^{15}\,\text{Hz} \tag{100}$$
$$\lambda = \frac{hc}{E} = 122\,\text{nm}. \tag{101}$$

c. (i)

$$E_{273} = -13.6/273^2 \tag{102}$$
$$E_{270} = -13.6/270^2 \tag{103}$$
$$\implies \Delta E = -13.6(\frac{1}{273^2} - \frac{1}{270^2}) \tag{104}$$
$$= 4.08 \times 10^{-6}\,\text{eV} \tag{105}$$

Using $E = hc/\lambda$:

$$\implies \lambda = \frac{hc}{E} = 0.304\,\text{m}. \tag{106}$$

(ii)

$$r_{273} = \frac{4\pi\epsilon_0\hbar^2}{m_e e^2}n^2 \tag{107}$$
$$= 3.96\,\mu\text{m}. \tag{108}$$

(iii)

$$v_{273} = c\alpha\tfrac{1}{n} \tag{109}$$
$$= 8.02 \times 10^3\,\mathrm{ms}^{-1} \tag{110}$$

d.

$$\Delta E \Delta t \sim \frac{\hbar}{2} = \frac{h}{4\pi} \tag{111}$$
$$\implies \Delta E = \frac{h}{4\pi\Delta t} \tag{112}$$
$$\Delta E = h\Delta f \tag{113}$$
$$\implies \Delta f = \frac{\Delta E}{h} \tag{114}$$
$$= \frac{1}{4\pi\Delta t} = 7.96 \times 10^6\,\mathrm{Hz}. \tag{115}$$

11 Question 11

a. Carbon-14 would be used because it is absorbed by living organisms while they are alive, and because it has a half-life comparable to what one might expect the age of the sample to be.

b. $A = 14$

$$r = (1.2 \times 10^{-15}\,\mathrm{m})A^{1/3} \tag{116}$$
$$= 2.89 \times 10^{-15}\,\mathrm{m} \tag{117}$$

c.

$$\lambda = \frac{\log_e 2}{\tau_{1/2}} \tag{118}$$
$$= 1.21 \times 10^{-4}\,\mathrm{yr}^{-1} \tag{119}$$

d. 1.21×10^{-4} yr^{-1} $= 2.3 \times 10^{-10}\,\mathrm{min}^{-1}$.

Hence (250 decay/min)/(2.3×10^{-10} min^{-1}) $= 1.09 \times 10^{12}$ Carbon-14 atoms remain.

e. We know $N(t = 5300\,yr) = 1.09 \times 10^{12}$.

$$N(t) = N_0 e^{-\lambda t} \tag{120}$$
$$\rightsquigarrow 1.09 \times 10^{12} = N_0 e^{-1.21\times10^{-4}\times5300} \tag{121}$$
$$\rightsquigarrow N_0 = 2.07 \times 10^{12} \tag{122}$$

Ratio of Carbon-12 to Carbon-14 is 1.3×10^{12}.

$$\implies 1.3 \times 10^{12} \times 2.07 \times 10^{12} = 2.69 \times 10^{24} \text{ particles of } {}^{12}\mathrm{C}. \tag{123}$$